LightBo

PACKAGE DIMENSION INTERNAL CIRCUIT DIAGRAM

LB30402

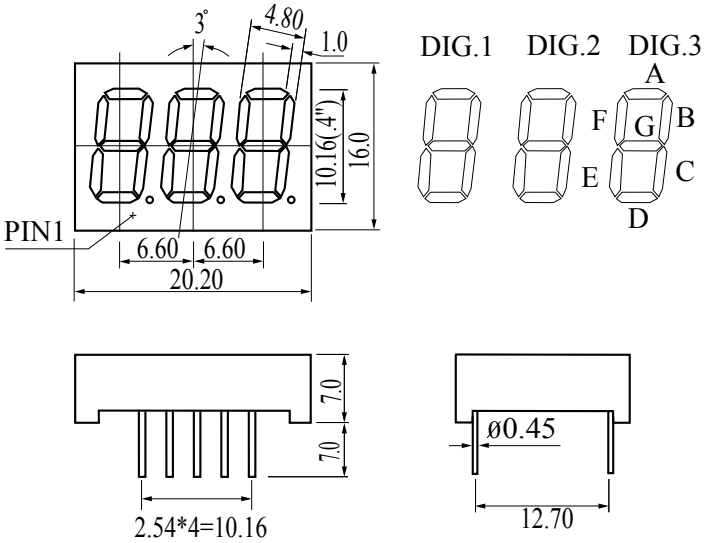

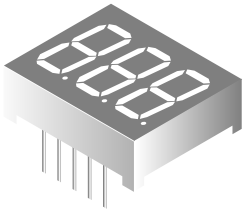

CODE J

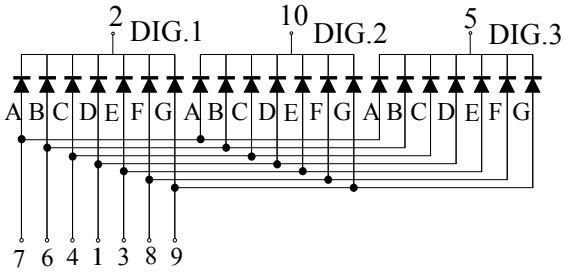
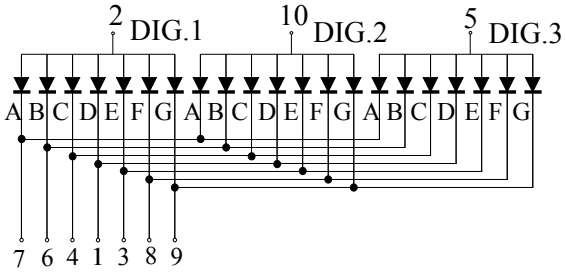
CODE G